Autodesk Fusion:

Motor Bracket w/ Wheels

Motor Dimensions:
JGA25-370 motor
- body length: 52mm
- shaft: 12mm
- total: 64mm

Bracket Dimensions:

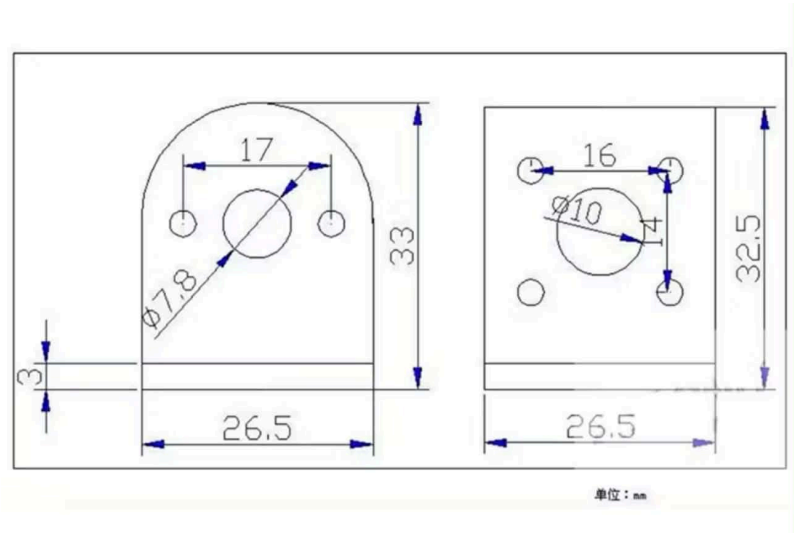

Wheels: RC 907-6087 Rubber Tires & Plastic Wheel 4Pcs For HSP HPI 1:10 On-Road Car RC Car Remote Control Car

Material: Plastic Wheel / Rubber Tires
Rubber Tires Diameter: 63mm / Width:26mm
Wheel Diameter: 52mm / Width: 26mm

Wheel Hex Drive: 12mm
Weight: 120g/sets
4xWheel and 4xTires Complete, Insert Sponge

3d model for fitting:

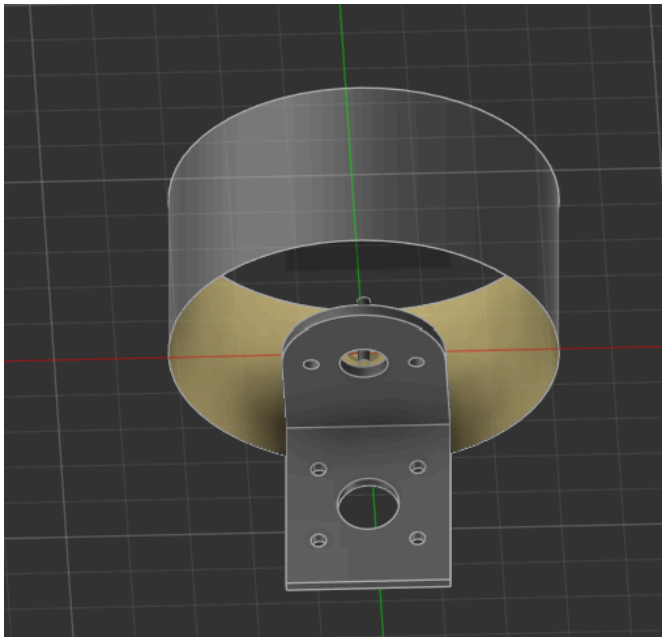

With motor:

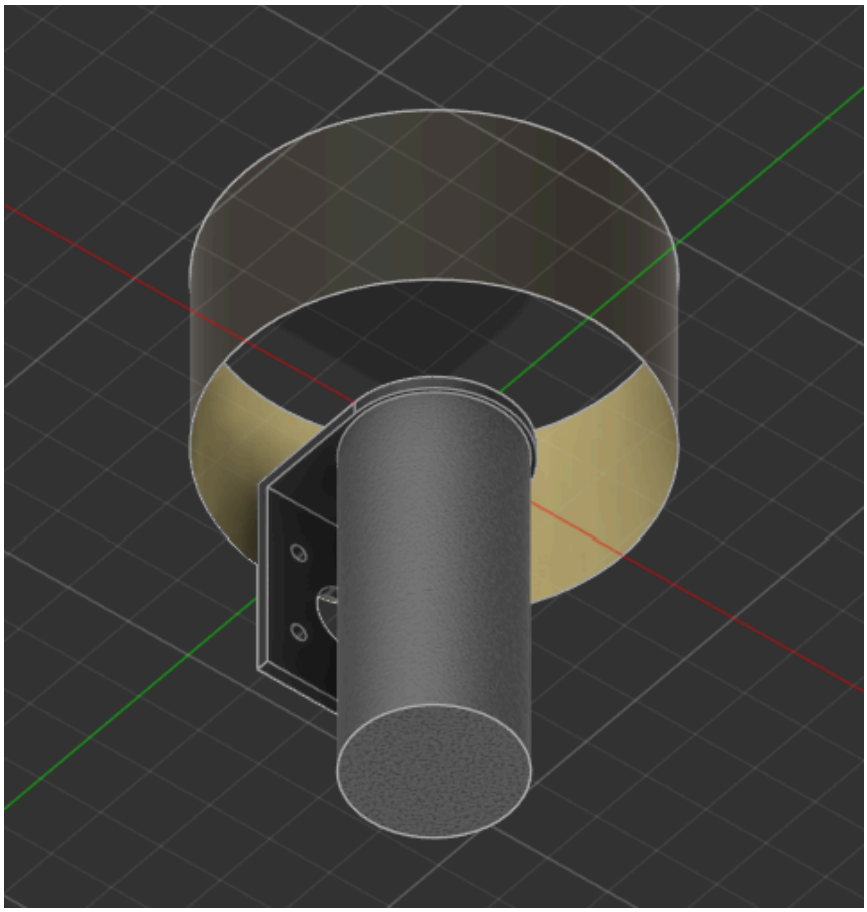

Set tolerance:

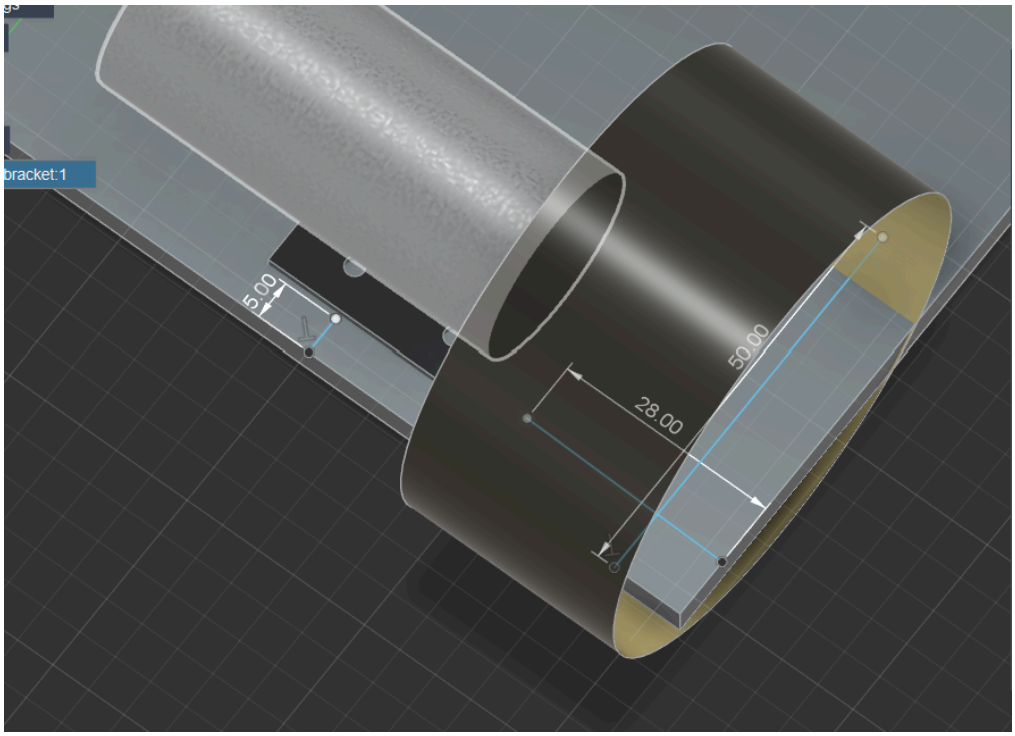

SumoBot Assembly with motor holes and utility motor/ IR sensor holes with 5.1mm diameter hole

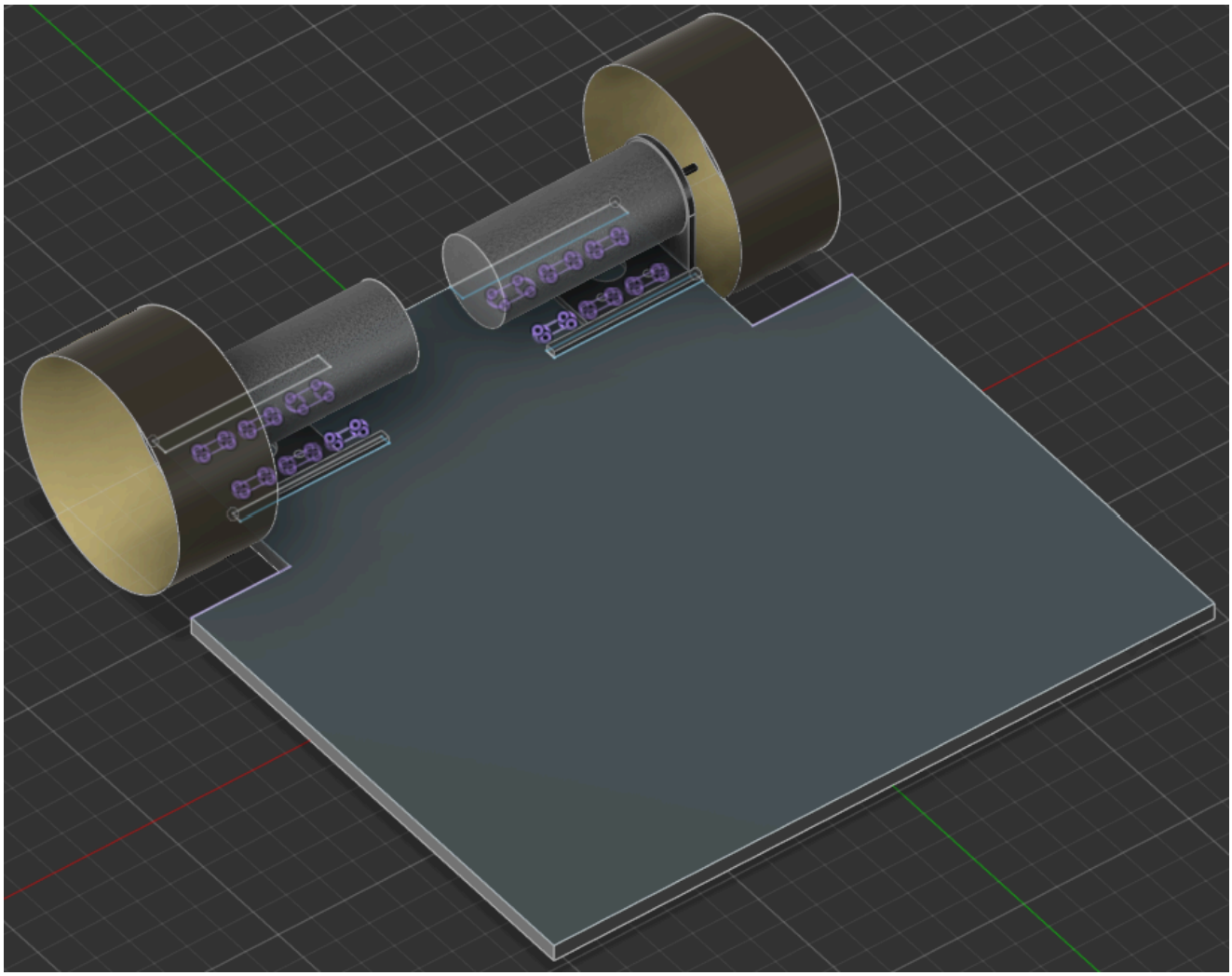

\
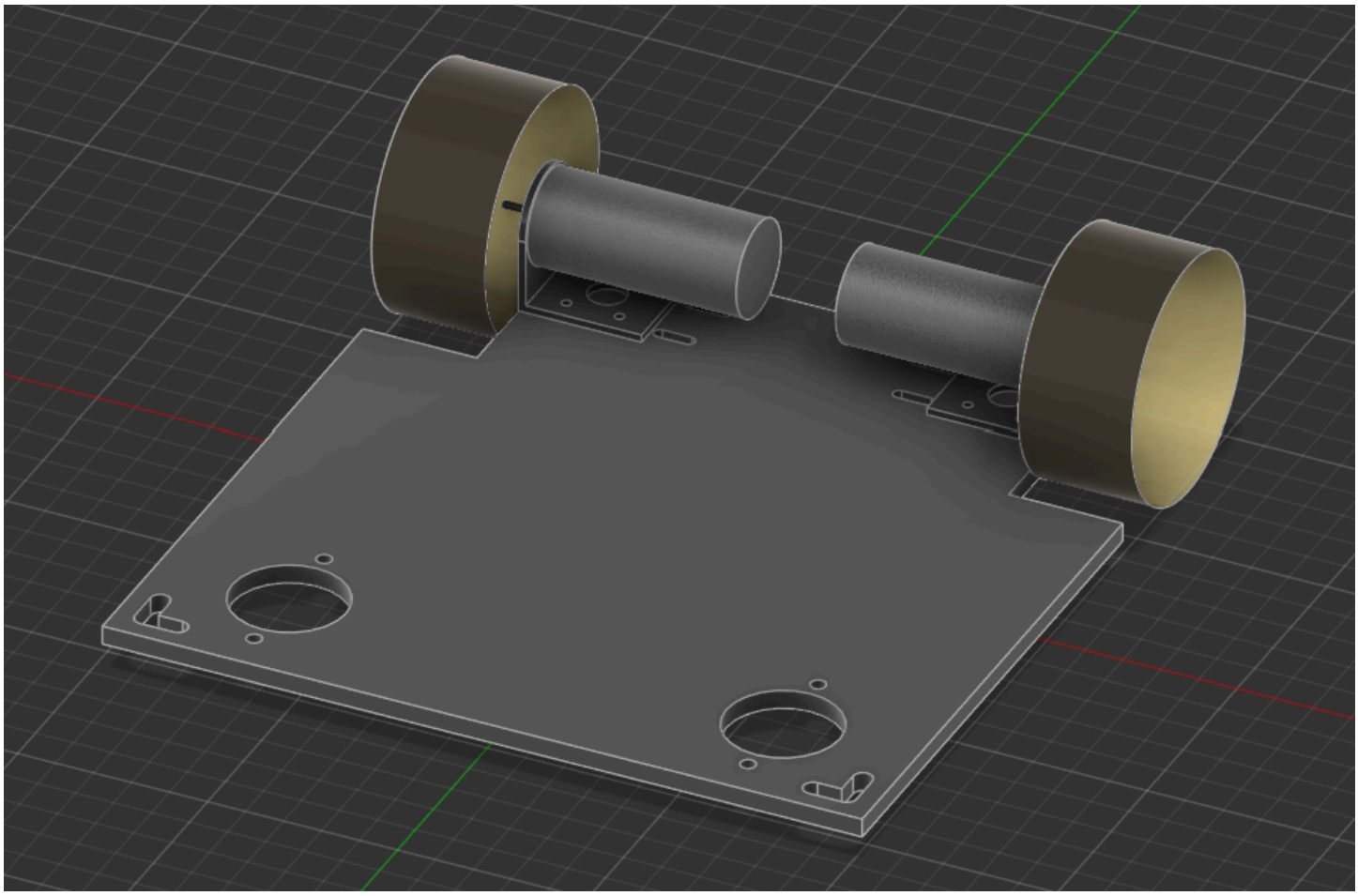
Added vertical and horizontal holes for IR sensors, as well as two holes for Steel Metal Hall caster bearing wheels: